elements

enabling technologies for Life Science

Company presentation

64th Biophysical Meeting

San Diego, February 16th

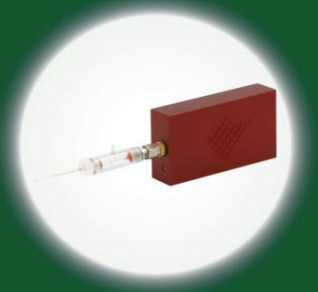

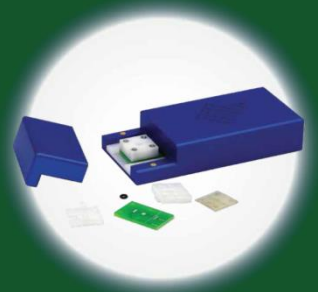

info@elements-ic.com **www.elements-ic.com**

outline

Company overview - ***F. Thei***

Patch-clamp instruments and software - ***A. Porro***

ePatch User Cases

A. Porro – University of Milan
- … - NYU
N. Mnatsakayan - Yale University

Nanopore Reader User Cases

- M. Platt – Loughborough University (UK)
- D. Niedzwiecki – Goeppert LLC
- M. Nishio – Tokyo University

elements
enabling technologies for Life Science

highlights

- established in December 2013
- 9 full time employees (3 PhD, 5MS)
- 180 customers worldwide (Universities, Research Centres, Companies)
- local distributors in USA, China, Korea, Japan
- part of Sentinel ITN UE – hosting a PhD Marie Curie student
- based in Cesena, Italy

elements
enabling technologies for Life Science

applications

- electrophysiology, patch-clamp
- nanopore experiments
- nanoparticle detection
- single entity electrochemistry

core technology

Custom-designed CMOS microchip for ultra low noise current readout

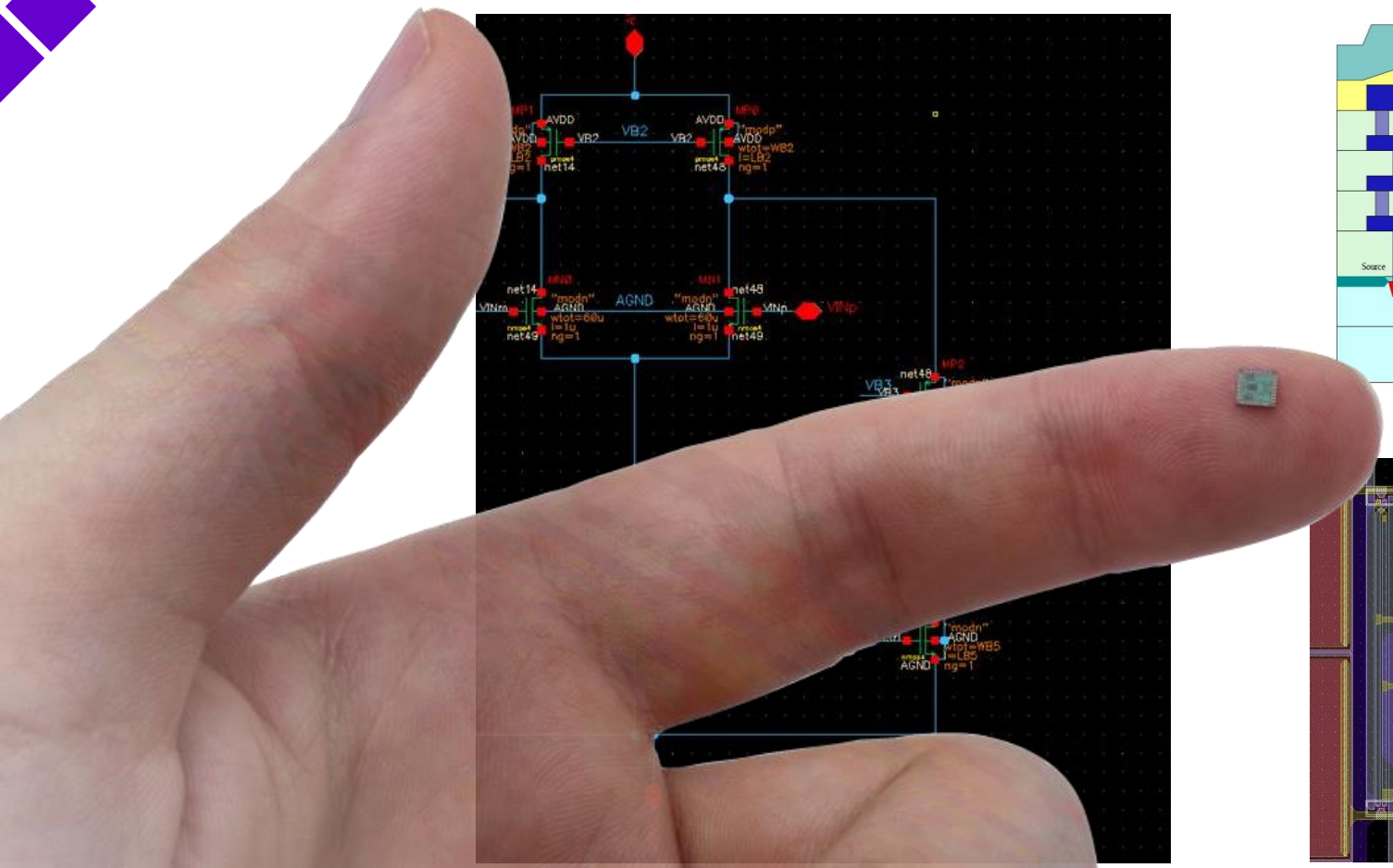

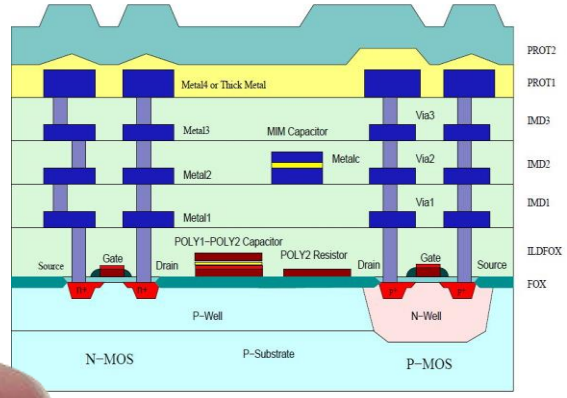

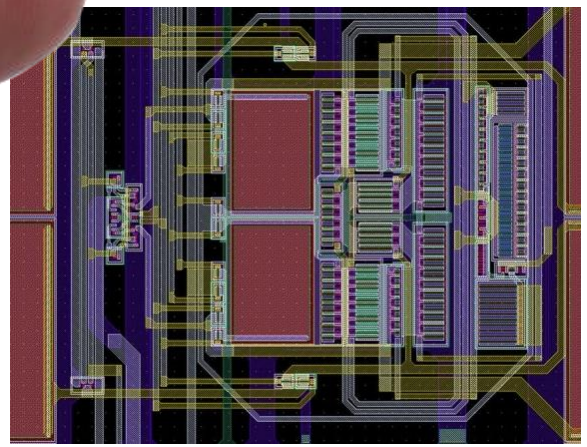

elements
enabling technologies for Life Science

instruments architecture

Integrated instrument: low-noise amplifier, digitizer and stimulus generator ALL in the same box

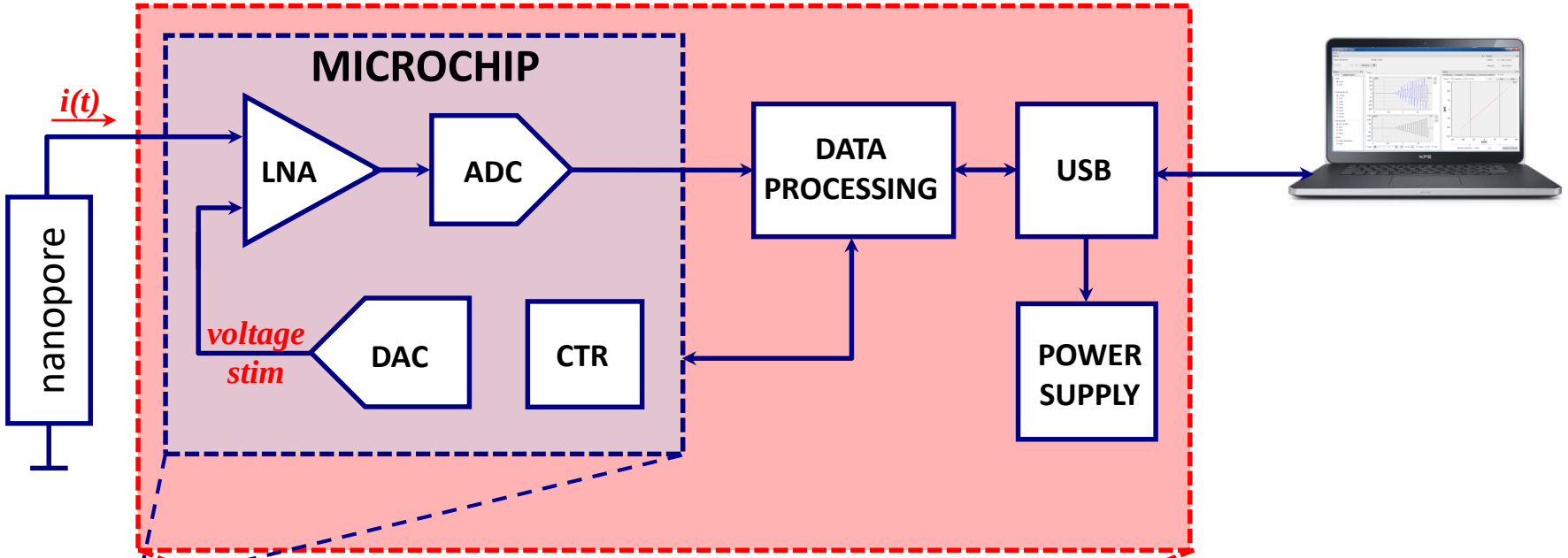

elements
enabling technologies for Life Science

products

- eONE: 1 – channel amplifier
- multichannel amplifiers (4 and 16 ch)
- ePatch – patch clamp amplifiers
- Nanopore Reader
- OEM amplifiers

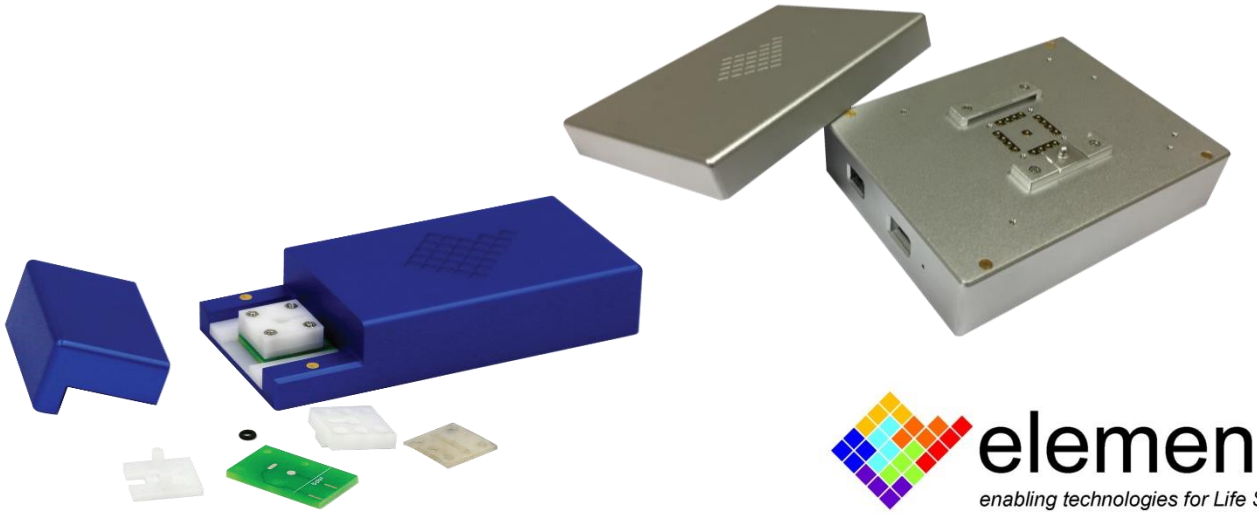

elements
enabling technologies for Life Science